Merksemsebaan 270 - 2110 Wijnegem - Belgium
T. + 32 3 360 88 88
info@cranes.be

Number	**K136**
Manufacturer	LIEBHERR
Type	LTM 1045/1
Lifting capacity	50t
Year	2002
Factory number	53193
Carrier	
Chassis number	W093730002EL05044
Engine	LIEBHERR D926 TI-E A5
Capacity	270 kW
Emission	EURO 3
Engine Brake	yes
Chalwyn valve	no
Spark arrestor	yes
km	128.000 approx.
Hours	22.450 approx.
Transmission	ZF 12 speed AS-TRONIC
Telma	no
Axle lines	3
Drive	6 x 4 x 6
Tyres	6 x 14,00 R 25
Superstructure	
Engine	NVT
Capacity	
Emission	
Chalwyn valve	
Spark arrestor	
hours	15.660
Main Boom	10,3 - 34,0 m
Jib	1,4 - 9,2 - 16 ,0 m
Luffing jib	no
Counter weight	7,0 t
Hoist cable	
Diameter	15 mm
Length	180 m
Hooks	3 sheaves 32 t

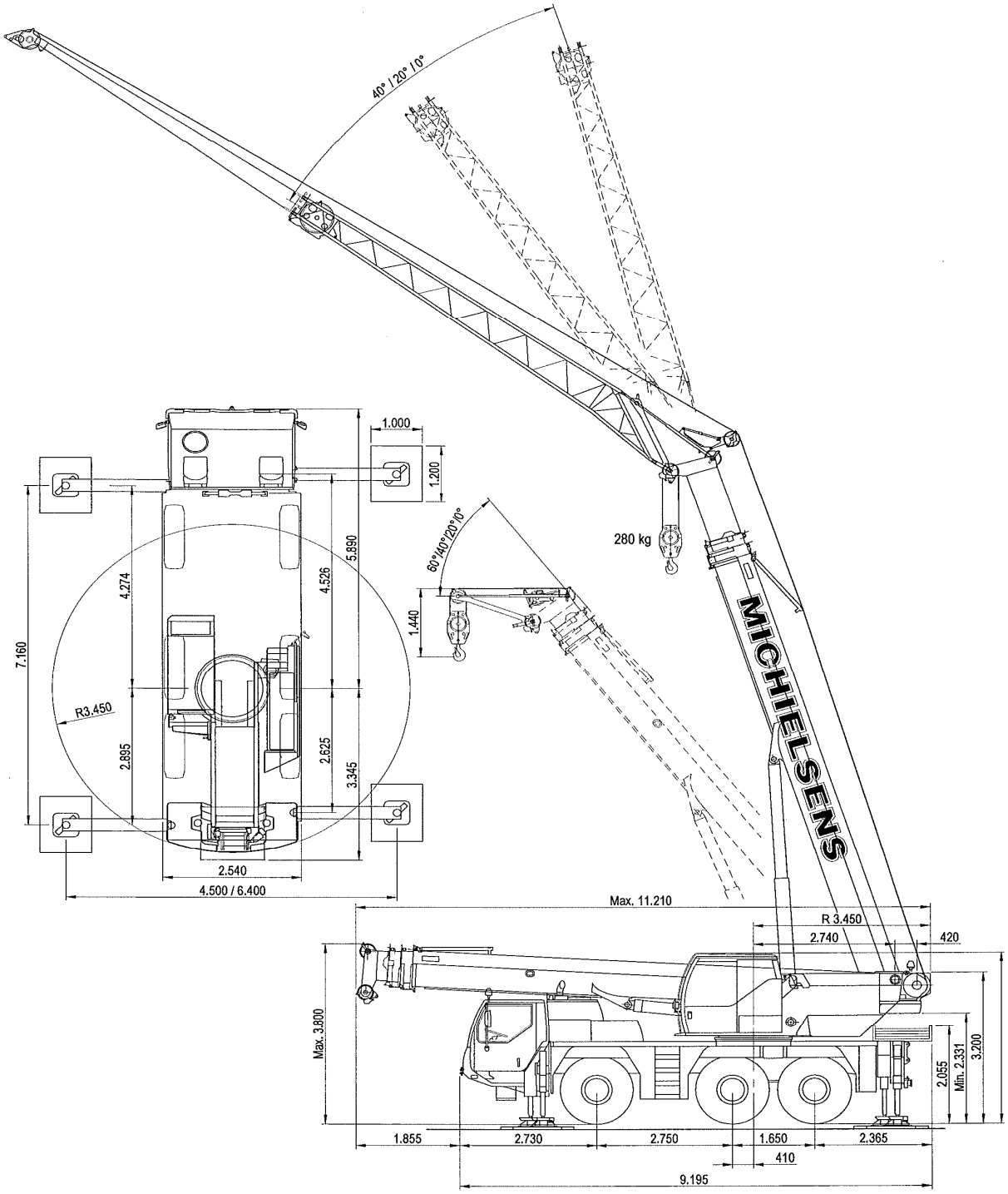

For reference only.
Dimensions in millimeters.

More information? **info@cranes.be** **Tel: +32 3 360 88 88**